KACO

6400xi
7600xi

KACO blueplanet 00xi series transformerless grid-tied inverters

Performance

High efficiency:	96.5% CEC efficiency on all 00xi series inverters ensures lowest energy losses
High efficiency at low power:	KACO transformerless inverters are 94% efficient at 10% output power
Designed for max. ROI:	Newest generation IGBTs and advanced MPPT algorithms

Ease of installation

easyINSTALL T-bracket:	Minimizes mounting process to approximately 15 minutes
Lockable DC disconnect:	Save up to $100 with the pre-wired & separable integrated disconnect
Multiple knock-outs:	Knock-outs on bottom, sides and back offer great installation flexibility
Connection box:	Avoid costly channel raceways by directly connecting multiple inverters
Reduced weight:	KACO inverters are up to 50% lighter than comparably sized inverters
Reduced side clearance:	No fan cooling outlets on the sides
Field selectable voltages:	Use the same inverter in 208V, 220V or 240V grid settings
Four fused DC inputs:	The inverter doubles as a code compliant string combiner

Reliability

History:	KACO has been manufacturing power electronics for more than 60 years
Experience:	More than 3 GW of inverters worth more than $1 billion installed worldwide
Split architecture design:	Power electronics are protected in a separate chamber
Sealed outdoor enclosure:	Protects power electronics from dust, humidity, insects and ocean air
DC reverse polarity protection:	Avoids potential damage to inverter caused by mis-wiring during installation
Redundant power capacitors:	Increases the lifetime of your inverter
Convection cooling:	Natural convection cooling minimizes use of the assist fan

Compliant with UL 1741, IEEE 1547, CSA 22.2

TÜV Rheinland of North America, Inc. C US

Monitoring

KACO proLOG:
Monitor up to 32 inverters as well as multiple sensors.

KACO watchDOG:
Optional monitoring card decreases costs and increases reliability to give you the most innovative monitoring solution.

easyLINK data interface:
Integrated RS485 comm card saves over $200 compared to some competitors.

Integrated night switch:
Activates inverter display even after the PV system has shut down.

SymBus monitoring interface:
Monitors and controls phase imbalance on 3-phase systems.

blueplanet web:
Free monitoring option for residential systems up to 10kW.*

**Available for all system sizes for additional cost.*

Warranty

KACO easySWAP policy:
Benefit from KACO's no hassle inverter exchange policy.

Reimbursement policy:
KACO's $150 service reimbursement is among the most generous in the industry .

KACO guarantee:
00xi series inverter repairs after warranty will never be higher than $600.

10 years standard warranty:
Warranties are only as valuable as the strength and longevity of the manufacturer and KACO is one of the few established inverter companies older than the warranties they offer.

Model number		blueplanet 6400xi	blueplanet 7600xi
Input data (DC)			
DC operating range	240 V	365 – 510 V_{DC}	365 – 510 V_{DC}
	208 V	320 – 510 V_{DC}	320 – 510 V_{DC}
Max. DC input voltage		600* V_{DC}	600* V_{DC}
Nominal DC input current		21 A_{DC}	24 A_{DC}
Max. DC input Isc current		36 A_{DC}	36 A_{DC}
Output data (AC)			
Max. continuous output power (CEC)		6400 W	7600 W
Max. over-current protection		50 A	50 A
Max. continuous current	240 V	27 A_{AC}	32 A_{AC}
	208 V	31 A_{AC}	37 A_{AC}
	220 V	30 A_{AC}	35 A_{AC}
AC operating range	240 V	211 – 264 V	
	208 V	184 – 226 V	
	220 V	198 – 242 V (for Mexico)	
Frequency		60 Hz (59.3 – 60.5 Hz)	
Maximum efficiency	240 V	97.2%	97.1%
	208 V	96.9%	97.0%
CEC rated efficiency		96.5%	96.5%
Additional data			
DC disconnect ratings		600 V, 4 x 16 A	
Cooling		True convection - ultimate reliability, with assist fan	
DC reverse polarity protection		Yes	
Ground fault protection		Integrated residual current detector	
Grounding		Ungrounded, transformerless inverter	
Visual displays		Backlit LCD w/ convenient night switch & push button controls	
Included accessory interfaces		easyLINK RS485 & SymBus (Ethernet optional)	
Ambient temp @ max AC power		-4˚F – +104˚F (-20˚C – + 40˚C)	
Ambient operating temp		-4˚F – +140˚F (-20˚C – + 60˚C)	
Thermal protection		Yes	
Noise emissions		< 45 dB (near silent operation)	
Night power consumption		208V: 0.26W, 240V: 0.36W	
Warranty		Standard easySWAP 10 years	
Certifications			
Safety compliance		UL 1741, IEEE 1547, NEC, CSA 22.2 No.107.1-01	
Communications compliance		FCC Part 15 Class A and B	

* Unit will only feed power if the PV voltage is less than 550Vdc.

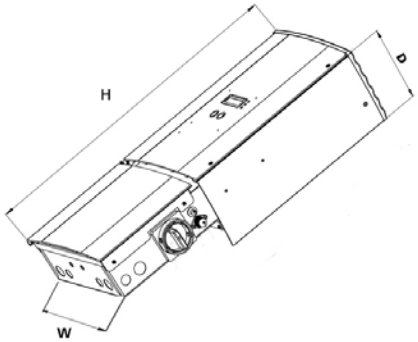

Mechanical Specifications				
Model	**Height (H)**	**Width (W)**	**Depth (D)**	**Weight**
7600xi	44 1/8 in. (1121 mm)	14 in. (356 mm)	8 7/8 in. (226 mm)	95 lbs (43 kg)
6400xi	44 1/8 in. (1121 mm)	14 in. (356 mm)	8 7/8 in. (226 mm)	95 lbs (43 kg)
Enclosure		NEMA 3R		

Specifications are subject to change without notice. KACO blueplanet 02xi series 03/09/12

KACO new energy.
T: +1 (866) 522 6765 • F: +1 (415) 931 1688
kacoinfo@kaco-newenergy.com • www.kaco-newenergy.com

Printed on post consumer material